PROJECT NAME:	AGRICULTURAL SCHOOL
PROJECT LOCATION:	MANGROVE MOUNTAIN, NSW
CLIENT NAME:	TAMOR TARIQ
PLANT SIZE:	13,275 LITRES PER DAY
QUALITY:	CLASS B EFFLUENT
REVISION:	0

STANDARD INDUSTRIES PTY LTD
1 MAIN ROAD
TOUKLEY NSW 2263
PH: 02 4396 7750
FAX: 02 4396 7787
www.standardindustries.com.au

CLIENT NAME: M. TARIQ

Project: MANGROVE MOUNTAIN AGRICULTURAL SCHOOL

This drawing and design remains the property of Standard Industires Pty.Ltd. and may not be copied in whole or in part without the prior written approval of Standard Industries Pty. Ltd.

PROJECT NAME: 13,275kL/DAY SEWERAGE TREATMENT PLANT
CLASS B EFFLUENT VIA AERATION, ANOXIC AND SETTLING

DRAWING TITLE: PROJECT TITLE PAGE

DRAWN BY:	DESIGNED:	DATE:
JB	JB	JULY2012
CHECKED BY: LT	APPROVED: XX	SCALE: NTS

JOB NUMBER:	DRAWING NUMBER:	REVISION:
2500	2500-PID-0-101	0

AMENDMENT	DATE	REVISION	AMENDMENT	DATE
PRE-ENGINEERING COMPLETE	06/07/12			06/07/12

INSTRUMENT SYMBOL

IDENTIFICATION LETTER — LT XXX — INSTRUMENT TAG No. — LEVEL TRANSMITTER

IDENTIFICATION LETTER — LSH XXX — INSTRUMENT TAG No. — LEVEL SWITCH HIGH

IDENTIFICATION LETTER — LSL XXX — INSTRUMENT TAG No. — LEVEL SWITCH LOW

IDENTIFICATION LETTER — PS XXX — INSTRUMENT TAG No. — PRESSURE SWITCH

IDENTIFICATION LETTER — PG XXX — INSTRUMENT TAG No. — PRESSURE GAUGE

IDENTIFICATION LETTER — PT XXX — INSTRUMENT TAG No. — PRESSURE TRANSMITTER

IDENTIFICATION LETTER — VG XXX — INSTRUMENT TAG No. — VACUUM GAUGE

IDENTIFICATION LETTER — VT XXX — INSTRUMENT TAG No. — VACUUM TRANSMITTER

IDENTIFICATION LETTER — pH XXX — INSTRUMENT TAG No. — pH ANALYSER

IDENTIFICATION LETTER — DO XXX — INSTRUMENT TAG No. — DISSOLVED OXYGEN ANALYSER

IDENTIFICATION LETTER — MLSS XXX — INSTRUMENT TAG No. — MLSS ANALYSER

IDENTIFICATION LETTER — TUR XXX — INSTRUMENT TAG No. — TURBIDITY ANALYSER

IDENTIFICATION LETTER — Cl2 XXX — INSTRUMENT TAG No. — FREE CHLORINE ANALYSER

IDENTIFICATION LETTER — CON XXX — INSTRUMENT TAG No. — CONDUCTIVITY ANALYSER

IDENTIFICATION LETTER — ORP XXX — INSTRUMENT TAG No. — ORP ANALYSER

CSL / D — PLC (INSTRUMENT SIGNAL TO PLC)

M — FLOW METER

VALVE NUMBERING

V-XXX
- VALVE CODE No.
- VALVE TYPE

V = MANUAL VALVE
NRV = NON RETURN VALVE
SV = SOLENOID VALVE
MV = MOTOR VALVE
MFV = MULTIFUNCTION VALVE

PIPE IDENTITY

DN XX- PIPING MATERIAL

VALVE SYMBOLS

GATE VALVE
NON RETURN VALVE
BALL VALVE
BUTTERFLY VALVE
PRESSURE RELIEF VALVE
NEEDLE VALVE
DIAPHRAGM VALVE
PLUG/COCK VALVE
GLOBE VALVE
SOLENOID VALVE
BALL VALVE WITH ELECTRIC MOTOR ACTUATOR
BUTTERFLY VALVE WITH ELECTRIC MOTOR ACTUATOR
KNIFE GATE VALVE
SPRING OPPOSED SINGLE ACTING, FC
SPRING OPPOSED SINGLE ACTING, FO
DOUBLE ACTING CYLINDER WITH 3 WAY SOLENOID PILOT VALVE
FOOT VALVE
AIR RELEASE VALVE
LEVEL CONTROL VALVE MECHANICAL
PULSATING DAMPENER
THREE WAY VALVE
ANGLE VALVE
MULTIFUNCTION VALVE

EQUIPMENT NUMBERING

PU-XXX
- EQUIPMENT CODE No.
- EQUIPMENT IDENTITY

PU = PUMP
BL = BLOWER
C = COMPRESSOR
T = TANK
UF = ULTRA FILTRATION
RO = REVERSE OSMOSIS
UV = ULTRA VIOLET
ACF = ACTIVATED CARBON FILTER
MMF = MULTI MEDIA FILTER
CF = CARTRIDGES FILTER
BF = BAG FILTER
AG = AGITATOR
FM = FLOW METER
FF = FOAM FRACTIONATOR
HE = HEAT EXCHANGER
LS = LINT SHAKER
SC = SCREENING
INJ = INJECTOR/EDUCTOR
F = FAN
O = OZONATOR

PIPING MATERIAL

ABS - ACRYLONITRILE BUTADIENE STYRENE
CON - CONCRETE
Cu - COPPER
SS316 - SPIRAL WOUND SS316
SS304 - SPIRAL WOUND SS304
FLH - FLEXIBLE HOSE
FRC - FIBRE REINFORCED CEMENT
GRP - GLASS REINFORCED PLASTIC
GS - GALVANISED PIPE
MS - MILD STEEL EPOXY PAINTED
PE - POLYETHYLENE
SS0 - STAINLESS STEEL GR. 304
SS1 - STAINLESS STEEL GR. 316
uPVC(xx) - UNPLASTICISED POLYVINYL CHLORIDE
- (SH) SEWER PIPE CLASS SH
- (12) CLASS 12

GMS - GALVANISED MILD STEEL

LINE IDENTITY

PROCESS FLOW
INSTRUMENT/ELECTRICAL SIGNAL

PIPING & EQUIPMENT SYMBOLS

PUMP
BLOWER
AIR COMPRESSOR
AGITATOR/MIXER
AIR FILTER
CARTRIDGES/ BAG FILTER
FINE BUBBLE DIFFUSER
SPRAY WATER
STATIC MIXER
HOSE CONNECTION
5485-B6-001 — LINE FROM/TO DRG. INDICATED
EXPANSION JOINT/ FLEXIBLE COUPLING
A-1 A-2 — PIPE SPEC. BREAK
"Y" STRAINER
200x150 — REDUCER (SHOW SIZE IF REQUIRED)
PENSTOCK
CARTRIDGES SEDIMENT/CARBON FILTER
FLAT SHEET SUBMERGED MEMBRANE

STANDARD INDUSTRIES PTY LTD
1 MAIN ROAD
TOUKLEY NSW 2263
PH: 02 4396 7750
FAX: 02 4396 7787
www.standardindustries.com.au

CLIENT NAME: M. TARIQ
Project: MANGROVE MOUNTAIN AGRICULTURAL SCHOOL

This drawing and design remains the property of Standard Industries Pty Ltd. and may not be copied in whole or in part without the prior written approval of Standard Industries Pty. Ltd.

PROJECT NAME: 13,275kL/DAY SEWERAGE TREATMENT PLANT
CLASS B EFFLUENT VIA AERATION, ANOXIC AND SETTLING

DRAWING TITLE: PROJECT DRAWINGS LEGEND

DRAWN BY:	DESIGNED:	DATE:
JB	JB	JULY2012
CHECKED BY:	APPROVED:	SCALE:
XX	XX	NTS

JOB NUMBER: 2500
DRAWING NUMBER: 2500-PID-0-102
REVISION: 0

AMENDMENT	DATE	REVISION	AMENDMENT	DATE
PRE-ENGINEERING COMPLETE	16/07/12			16/07/12

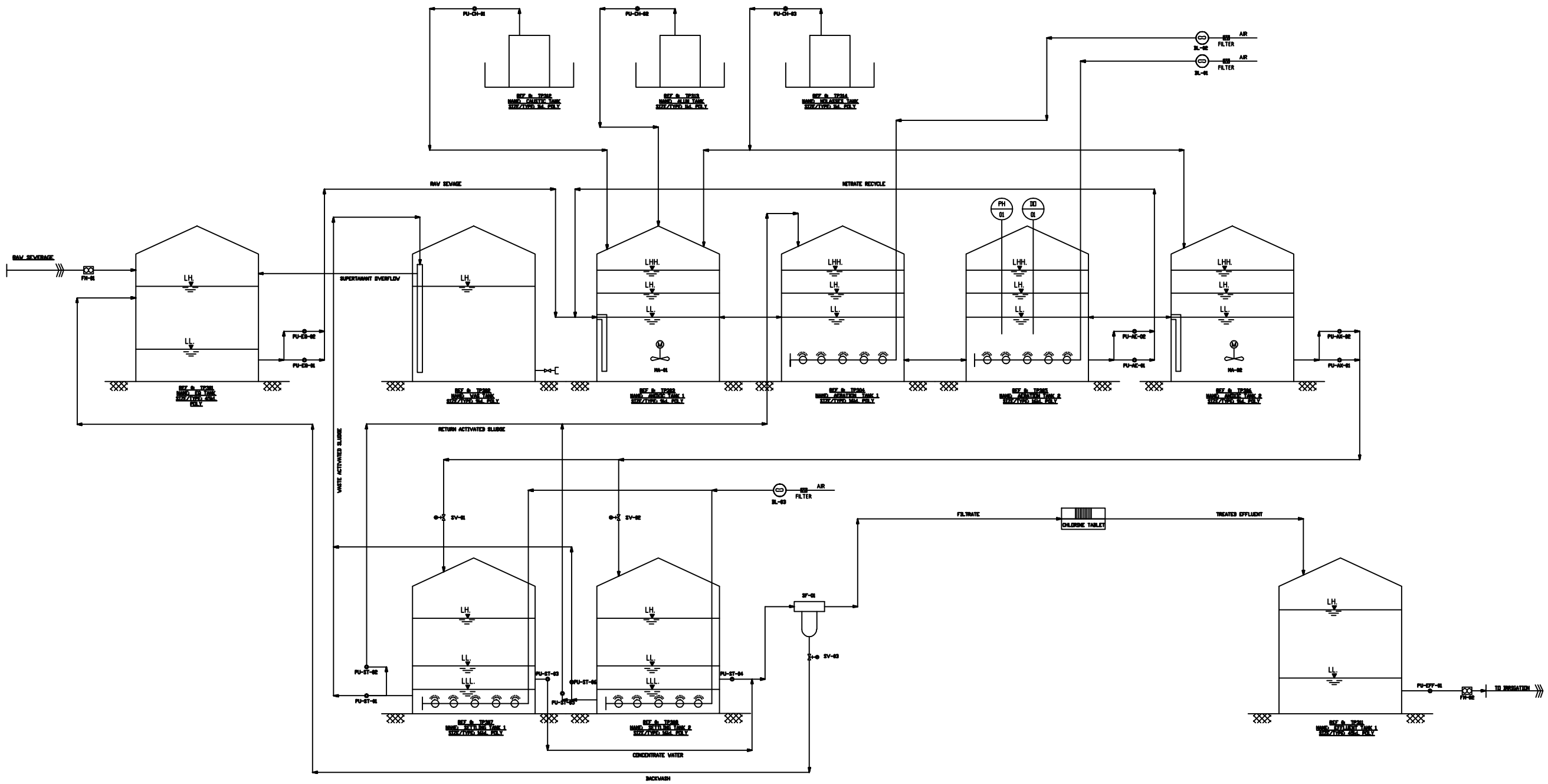

PU-EQ-01 EQUALISATION PUMP	PU-EQ-02 EQUALISATION PUMP	PU-AE-01 RECIRCULATION PUMP	PU-AE-02 RECIRCULATION PUMP	PU-AX-01 SETTLING FEED PUMP	PU-AX-02 SETTLING FEED PUMP	PU-CH-01 CAUSTIC PUMP	PU-CH-02 ALUM PUMP	PU-CH-03 MOLASSES PUMP	FM-01 INLET FLOW	FM-022 EFFLUENT FLOW	MX-01 ANOXIC 1 AGITATOR	MX-02 ANOXIC 2 AGITATOR
PU-ST-01 RAS PUMP	PU-ST-02 WAS PUMP	PU-ST-03 FILTER FEED PUMP	PU-ST-04 FILTER FEED PUMP	PU-ST-05 RAS PUMP	PU-ST-06 WAS PUMP	PU-EFF-01 EFFLUENT PUMP	BL-01 AERATION BLOWER 1	BL-02 AERATION BLOWER 2	BL-03 SETTLING BLOWER		DO-101 DISSOLVED OXYGEN	PH-101 PH ANALYSER

STANDARD INDUSTRIES PTY LTD
1 MAIN ROAD
TOUKLEY NSW 2263
PH: 02 4366 7750
FAX: 02 4366 7767
www.standardindustries.com.au

CLIENT NAME: M. TARIQ

PROJECT: MANGROVE MOUNTAIN AGRICULTURAL SCHOOL

This drawing and design remains the property of Standard Industries Pty.Ltd. and may not be copied in whole or in part without the prior written approval of Standard Industries Pty. Ltd.

PROJECT NAME: 13,275kL/DAY SEWERAGE TREATMENT PLANT
CLASS B EFFLUENT VIA AERATION, ANOXIC AND SETTLING

DRAWING TITLE: TREATMENT PLANT PROCESS FLOW DRAWING

DRAWN BY:	DESIGNED:	DATE:
JB	JB	JULY2012
CHECKED BY:	APPROVED:	SCALE:
XX	XX	NTS

JOB NUMBER: 2500
DRAWING NUMBER: 2500-PID-0-103
REVISION: 0

REVISION	AMENDMENT	DATE
14/07/12	PRE-ENGINEERING COMPLETE	14/07/12

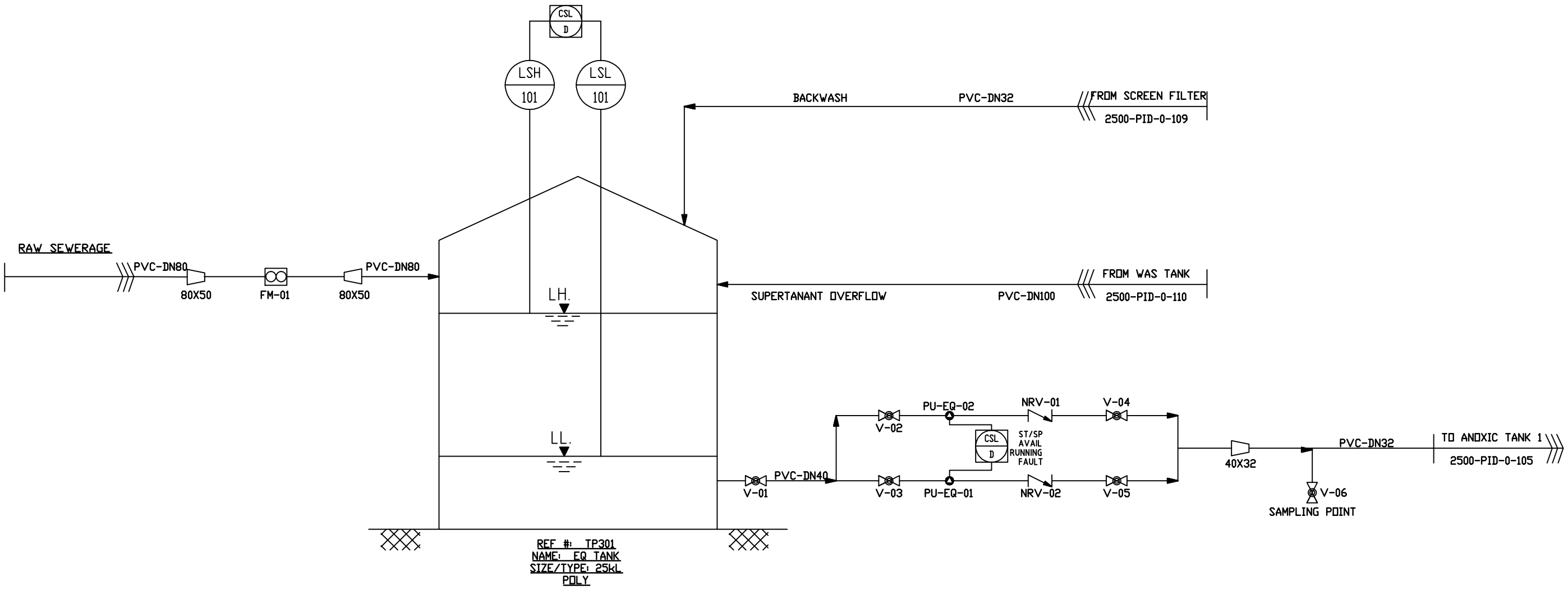

PU-EQ-01
DUTY PUMP
EQUALISATION PUMP
MAKE: DAVEY
MODEL: 62003E 1.6kW
CAPACITY: 50 LPM @ 18m TDH
SINGLE STAGE CENTRIFUGAL

PU-EQ-02
DUTY / STANDBY PUMP
EQUALISATION PUMP
MAKE: DAVEY
MODEL: 62003E 1.6kW
CAPACITY: 50 LPM @ 18m TDH
SINGLE STAGE CENTRIFUGAL

FM-01
FLOW METERMAKE: BURKERT
MODEL: SE-56 + SO55
QTY: 1 off
SIZE: DN50
MAG FLOW METER (FULL BORE)

STANDARD INDUSTRIES PTY LTD
1 MAIN ROAD
TOUKLEY NSW 2263
PH: 02 4396 7750
FAX: 02 4396 7767
www.standardindustries.com.au

CLIENT NAME: M. TARIQ

PROJECT: MANGROVE MOUNTAIN AGRICULTURAL SCHOOL

This drawing and design remains the property of Standard Industries Pty.Ltd. and may not be copied in whole or in part without the prior written approval of Standard Industries Pty. Ltd.

PROJECT NAME: 13,275kL/DAY SEWERAGE TREATMENT PLANT
CLASS B EFFLUENT VIA AERATION, ANOXIC AND SETTLING

DRAWING TITLE: EQUALISATION TANK PID

DRAWN BY: JB	DESIGNED: JB	DATE: JULY2012
CHECKED BY: XX	APPROVED: XX	SCALE: NTS

JOB NUMBER: 2500
DRAWING NUMBER: 2500-PID-0-104
REVISION: 0

DATE	AMENDMENT	REVISION	AMENDMENT	DATE
16/07/12	PRE-ENGINEERING COMPLETE	16/07/12		

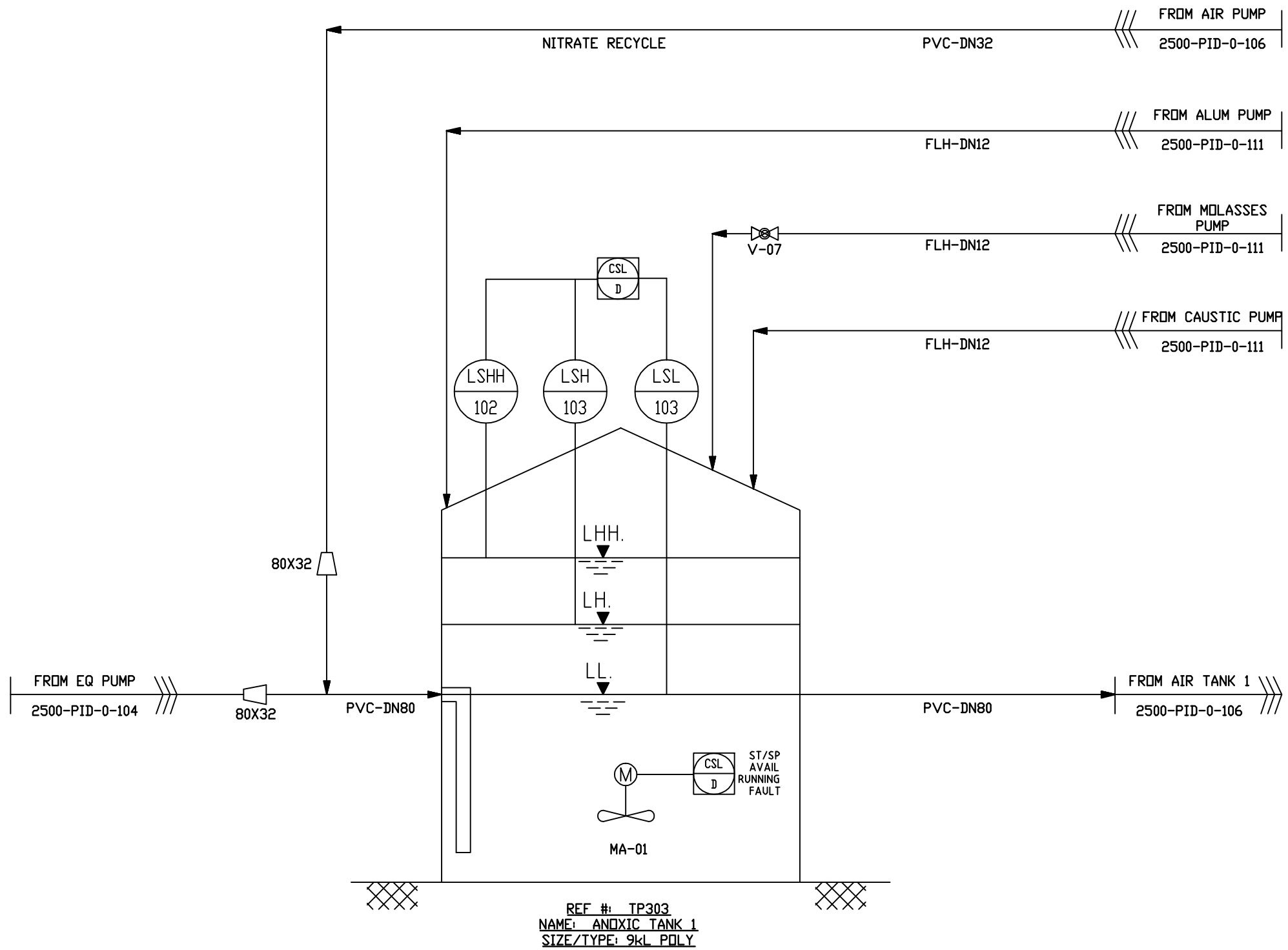

MA-01
DUTY ONLY
ANOXIC MIXER / AGITATOR
MAKE: SCM MIXER
MODEL: MX-gi 16.06.4 0.6kW
SUBMERSIBLE MIXER

STANDARD INDUSTRIES PTY LTD
1 MAIN ROAD
TOUKLEY NSW 2263
PH: 02 4396 7750
FAX: 02 4396 7787
www.standardindustries.com.au

CLIENT NAME: M. TARIQ

PROJECT: MANGROVE MOUNTAIN AGRICULTURAL SCHOOL

This drawing and design remains the property of Standard Industries Pty Ltd. and may not be copied in whole or in part without the prior written approval of Standard Industries Pty. Ltd.

PROJECT NAME: 13,275kL/DAY SEWERAGE TREATMENT PLANT
CLASS B EFFLUENT VIA AERATION, ANOXIC AND SETTLING

DRAWING TITLE: ANOXIC TANK # 1 PID

DRAWN BY: JB | DESIGNED: JB | DATE: JULY2012
CHECKED BY: XX | APPROVED: XX | SCALE: NTS

JOB NUMBER: 2500
DRAWING NUMBER: 2500-PID-0-105
REVISION: 0

DATE	AMENDMENT	REVISION	DATE	AMENDMENT
04/07/12	PRE-ENGINEERING COMPLETE		04/07/12	

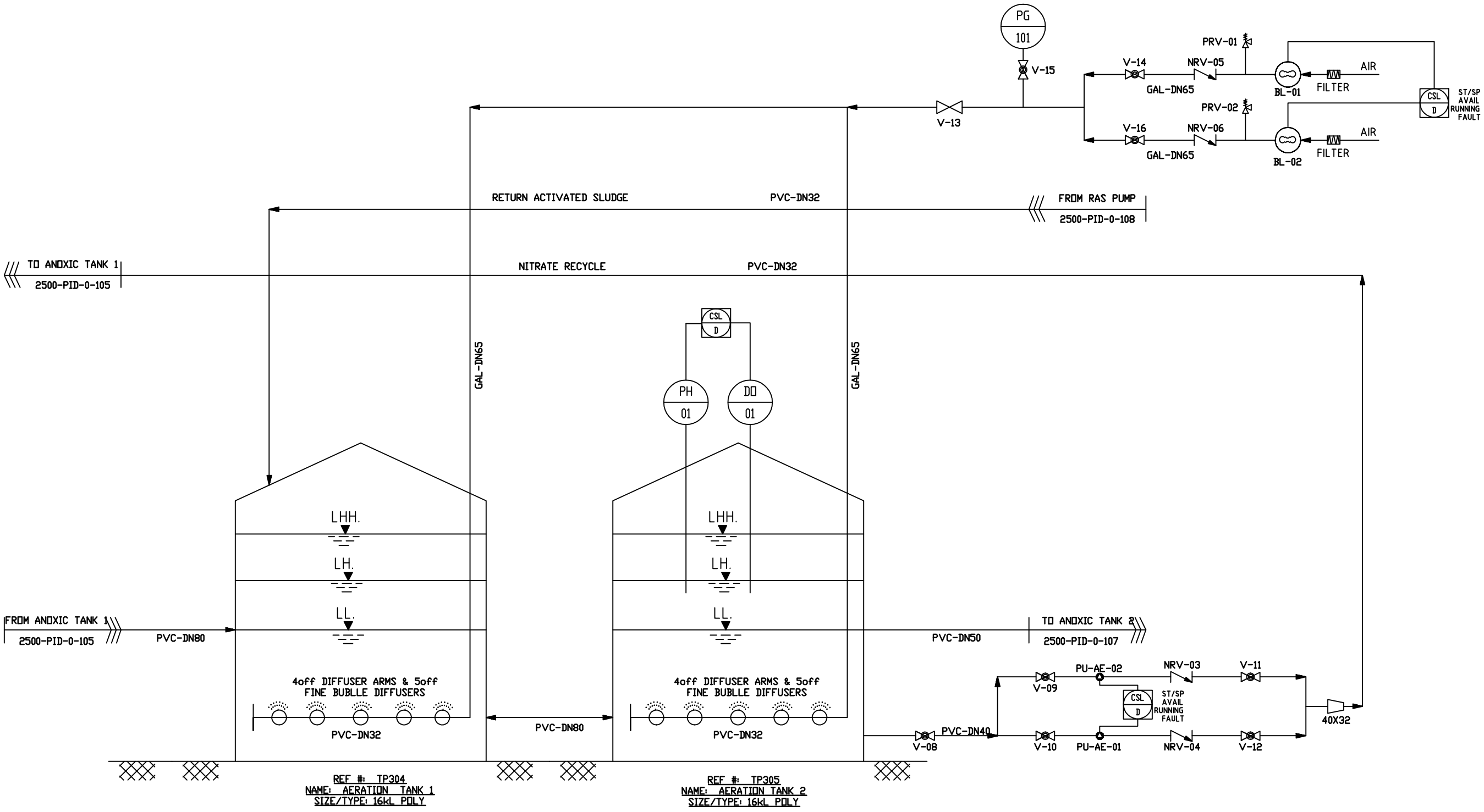

BL-01
DUTY BLOWER
AERATION BLOWER (C/W VFD)
MAKE: DYNAPUMPS
MODEL: 2RB720 H37 4.3kW
CAPACITY: 220 NM3/H @ 350 mBAR

BL-02
STANDBY BLOWER
AERATION BLOWER (C/W VFD)
MAKE: DYNAPUMPS
MODEL: 2RB720 H37 4.3kW
CAPACITY: 220 NM3/H @ 350 mBAR

PU-AE-01
DUTY PUMP
AERATION PUMP
MAKE: DAVEY
MODEL: 62003E 1.6kW
CAPACITY: 150 LPM @ 13 TDH
SINGLE STAGE CENTRIFUGAL

PU-AE-02
STANDBY PUMP
AERATION PUMP
MAKE: DAVEY
MODEL: 62003E 1.6kW
CAPACITY: 150 LPM @ 13 TDH
SINGLE STAGE CENTRIFUGAL

FINE BUBBLE DIFFUSER
MAKE: AIRFLEX
MODEL: AFD350
QTY: 40 off
DISC DIFFUSER

STANDARD INDUSTRIES PTY LTD
1 MAIN ROAD
TOUKLEY NSW 2263
PH: 02 4396 7750
FAX: 02 4396 7757
www.standardindustries.com.au

This drawing and design remains the property of Standard Industries Pty.Ltd. and may not be copied in whole or in part without the prior written approval of Standard Industries Pty. Ltd.

CLIENT NAME: M. TARIQ
PROJECT: MANGROVE MOUNTAIN AGRICULTURAL SCHOOL
PROJECT NAME: 13,275kL/DAY SEWERAGE TREATMENT PLANT
CLASS B EFFLUENT VIA AERATION, ANOXIC AND SETTLING
DRAWING TITLE: AERATION TANKS PID
DRAWN BY: JB
DESIGNED BY: JB
DATE: JULY2012
CHECKED BY: XX
APPROVED: XX
SCALE: NTS
JOB NUMBER: 2500
DRAWING NUMBER: 2500-PID-0-106
REVISION: 0

AMENDMENT	DATE	REVISION	AMENDMENT	DATE
PRE-ENGINEERING COMPLETE	14/07/12			14/07/12

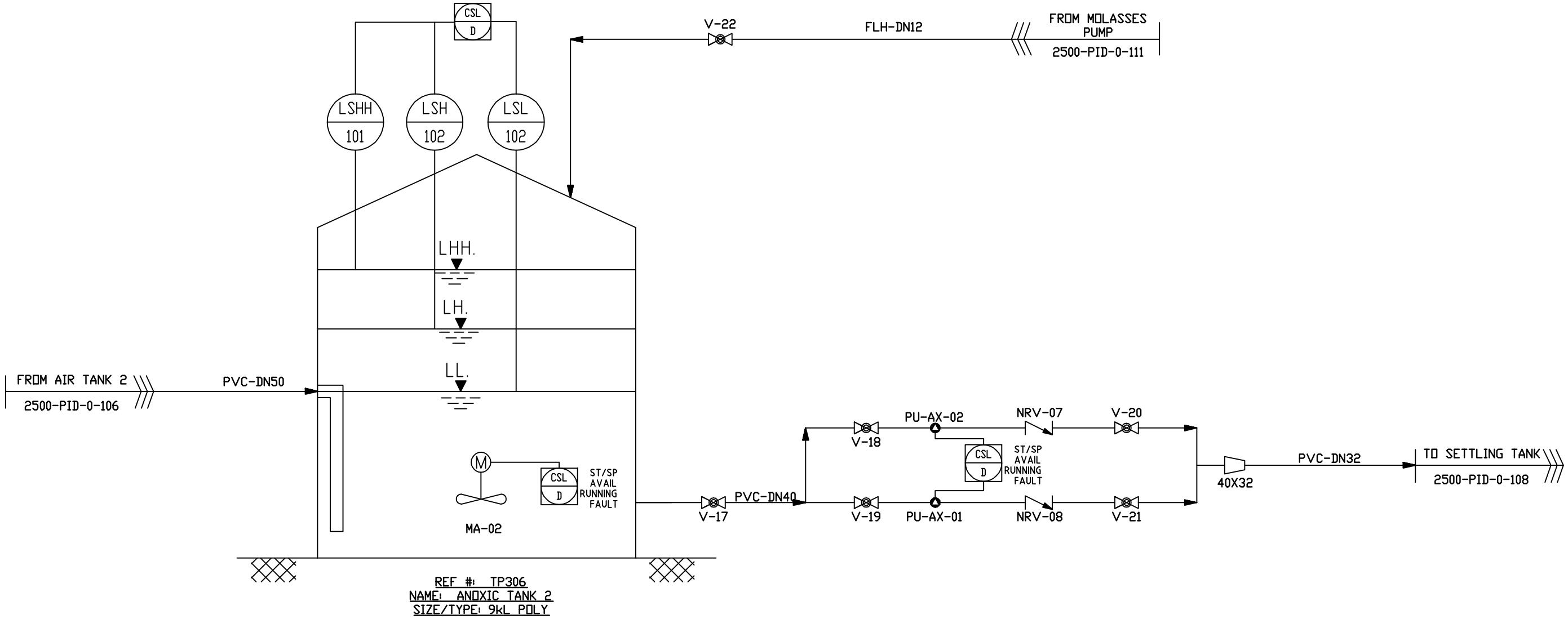

PU-AX-01
DUTY PUMP
ANOXIC PUMP
MAKE: DAVEY
MODEL: 62003E 1.6kW
CAPACITY: 150 LPM @ 13 TDH
SINGLE STAGE CENTRIFUGAL

PU-AX-02
STANDBY PUMP
ANOXIC PUMP
MAKE: DAVEY
MODEL: 62003E 1.6kW
CAPACITY: 150 LPM @ 13 TDH
SINGLE STAGE CENTRIFUGAL

MA-02
DUTY ONLY
ANOXIC MIXER / AGITATOR
MAKE: SCM MIXER
MODEL: MX-gi 16.06.4 0.6kW
SUBMERSIBLE MIXER

STANDARD INDUSTRIES PTY LTD
1 MAIN ROAD
TOUKLEY NSW 2263
PH: 02 4396 7750
FAX: 02 4396 7767
www.standardindustries.com.au

CLIENT NAME: M. TARIQ

PROJECT: MANGROVE MOUNTAIN AGRICULTURAL SCHOOL

This drawing and design remains the property of Standard Industries Pty Ltd, and may not be copied in whole or in part without the prior written approval of Standard Industries Pty. Ltd.

PROJECT NAME: 13,275kL/DAY SEWERAGE TREATMENT PLANT
CLASS B EFFLUENT VIA AERATION, ANOXIC AND SETTLING

DRAWING TITLE: ANOXIC TANK # 2 PID

DRAWN BY:	DESIGNED:	DATE:
JB	JB	JULY2012
CHECKED BY:	APPROVED:	SCALE:
XX	XX	NTS

JOB NUMBER: 2500
DRAWING NUMBER: 2500-PID-0-107
REVISION: 0

14/11/12	PRE-ENGINEERING COMPLETE	14/11/12		
AMENDMENT	DATE	REVISION	AMENDMENT	DATE

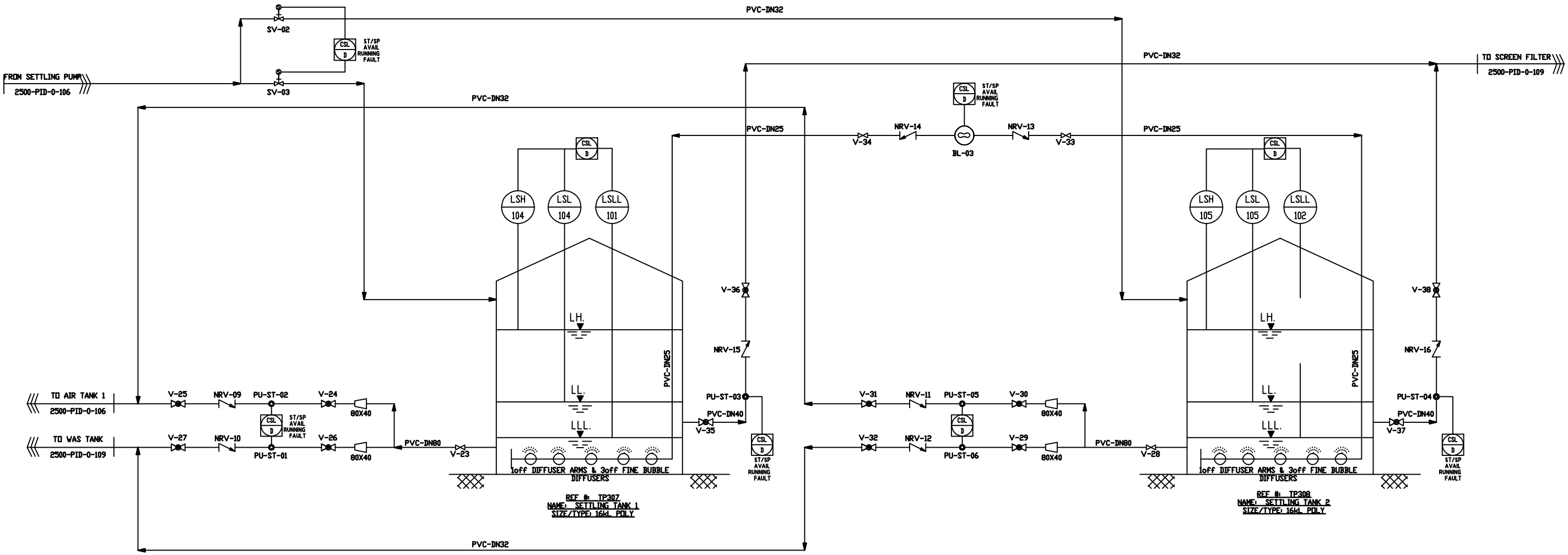

PU-ST-03
DUTY PUMP
FILTER FEED PUMP
MAKE: DAVEY
MODEL: 62103E 1.58kW
CAPACITY: 100 LPM @ 22 TDH
SINGLE STAGE CENTRIFUGAL

PU-ST-04
DUTY PUMP
FILTER FEED PUMP
MAKE: DAVEY
MODEL: 62103E 1.58kW
CAPACITY: 100 LPM @ 22 TDH
SINGLE STAGE CENTRIFUGAL

PU-ST-01
DUTY PUMP
RAS PUMP 1
MAKE: DAVEY
MODEL: 62003E 1.6kW
CAPACITY: 150 LPM @ 13 TDH
SINGLE STAGE CENTRIFUGAL

PU-ST-02
DUTY PUMP
WAS PUMP 1
MAKE: DAVEY
MODEL: 62003E 1.6kW
CAPACITY: 150 LPM @ 13 TDH
SINGLE STAGE CENTRIFUGAL

PU-ST-05
DUTY PUMP
RAS PUMP 2
MAKE: DAVEY
MODEL: 62003E 1.6kW
CAPACITY: 150 LPM @ 13 TDH
SINGLE STAGE CENTRIFUGAL

PU-ST-06
DUTY PUMP
WAS PUMP 2
MAKE: DAVEY
MODEL: 62003E 1.6kW
CAPACITY: 150 LPM @ 13 TDH
SINGLE STAGE CENTRIFUGAL

BL-03
DUTY BLOWER
SETTLING AERATION
MAKE: TECHNO TAKATSUKI
MODEL: HP 200 0.21kW
CAPACITY: 12 NM3/H@200 mBAR

FINE BUBBLE DIFFUSER
MAKE: AIRFLEX
MODEL: AFD350
QTY: 10 off
DISC DIFFUSER

STANDARD INDUSTRIES PTY LTD
1 MAIN ROAD
TOUKLEY NSW 2263
PH: 02 4396 7750
FAX: 02 4396 7767
www.standardindustries.com.au

CLIENT NAME: M. TARIQ

PROJECT: MANGROVE MOUNTAIN AGRICULTURAL SCHOOL

This drawing and design remains the property of Standard Industries Pty.Ltd. and may not be copied in whole or in part without the prior written approval of Standard Industries Pty. Ltd.

PROJECT NAME: 13,275kL/DAY SEWERAGE TREATMENT PLANT
CLASS B EFFLUENT VIA AERATION, ANOXIC AND SETTLING

DRAWING TITLE: SETLLING TANKS PID

DRAWN BY:	DESIGNED:	DATE:
JB	JB	JULY2012
CHECKED BY:	APPROVED:	SCALE:
XX	XX	NTS

JOB NUMBER: 2500
DRAWING NUMBER: 2500-PID-0-108
REVISION: 0

14/07/12	PRE-ENGINEERING COMPLETE	14/07/12	
AMENDMENT	DATE	REVISION	AMENDMENT	DATE

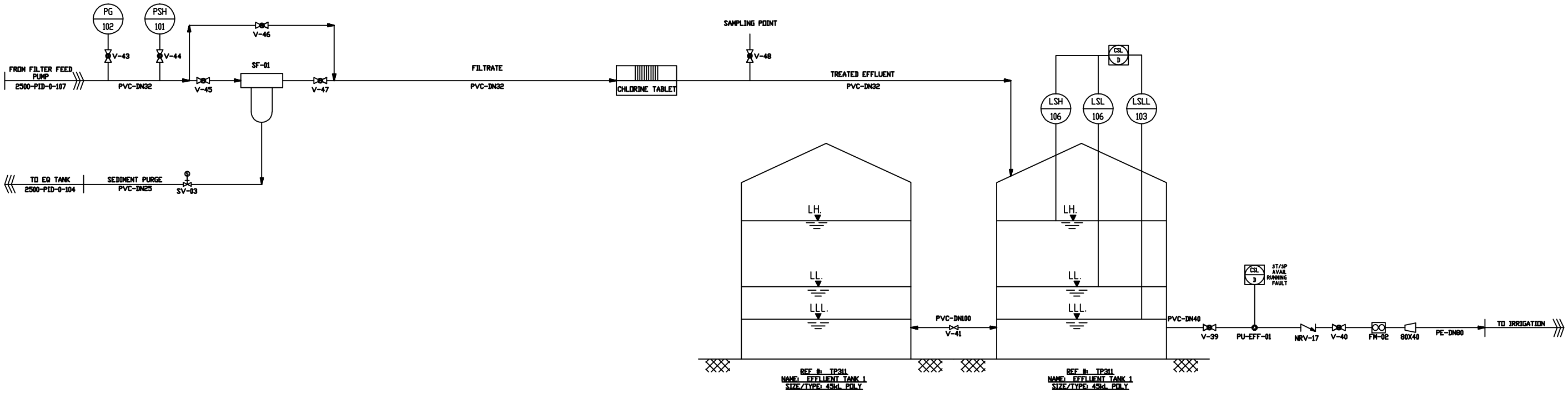

PU-EFF-01
DUTY PUMP
IRRIGATION PUMP
MAKE: DAVEY
MODEL: 62303S 3.9kW
CAPACITY: 400 LPM @ 32 TDH
SINGLE STAGE CENTRIFUGAL

FM-02
FLOW METERMAKE: BURKERT
MODEL: SE-56 + SD55
QTY: 1 oFF
SIZE: DN50
MAG FLOW METER (FULL BORE)

SF-01
SCREEN FILTER
MAKE: AMIAD
MODEL: 1 ½" SUPER SCREEN PLASTRIC
CAPACITY: 7kL/H
(22 MICRON NYLON)

SV-02
SOLENOID PURGE VALVE
MAKE: BURKERT
MODEL: 6312 SERIES (BRASS)
SIZE: DN32
NORMALLY CLOSED

STANDARD INDUSTRIES PTY LTD
1 MAIN ROAD
TOUKLEY NSW 2263
PH: 02 4366 7750
FAX: 02 4366 7787
www.standardindustries.com.au

CLIENT NAME: M. TARIQ

PROJECT: MANGROVE MOUNTAIN AGRICULTURAL SCHOOL

This drawing and design remains the property of Standard Industries Pty Ltd. and may not be copied in whole or in part without the prior written approval of Standard Industries Pty. Ltd.

PROJECT NAME: 13,275kL/DAY SEWERAGE TREATMENT PLANT
CLASS B EFFLUENT VIA AERATION, ANOXIC AND SETTLING

DRAWING TITLE: TREATED EFFLUENT STORAGE TANKS PID

DRAWN BY:	DESIGNED:	DATE:
JB	JB	JULY2012
CHECKED BY:	APPROVED:	SCALE:
XX	XX	NTS

JOB NUMBER: 2500
DRAWING NUMBER: 2500-PID-0-109
REVISION: 0

ASSESSMENT	DATE	REVISION	ASSESSMENT	DATE
PRE-ENGINEERING COMPLETE	14/07/12			14/07/12

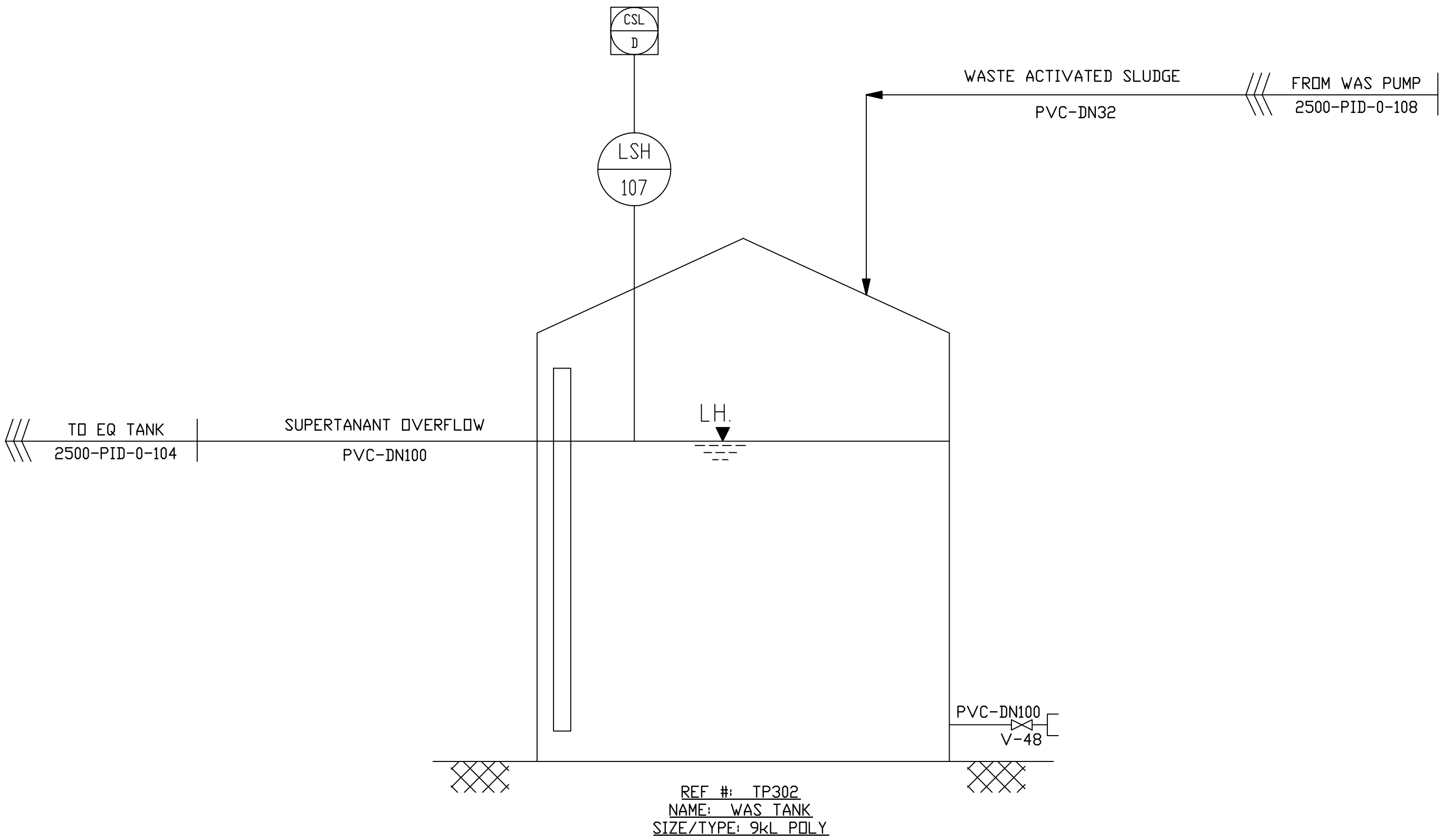

STANDARD INDUSTRIES PTY LTD
1 MAIN ROAD
TOUKLEY NSW 2263
PH: 02 4386 7750
FAX: 02 4386 7767
www.standardindustries.com.au

CLIENT NAME: M. TARIQ

PROJECT: MANGROVE MOUNTAIN AGRICULTURAL SCHOOL

This drawing and design remains the property of Standard Industries Pty.Ltd. and may not be copied in whole or in part without the prior written approval of Standard Industries Pty. Ltd.

PROJECT NAME: 13,275kL/DAY SEWERAGE TREATMENT PLANT
CLASS B EFFLUENT VIA AERATION, ANOXIC AND SETTLING

DRAWING TITLE: WASTE ACTIVATED SLUDGE TANK PID

DRAWN BY:	DESIGNED:	DATE:
JB	JB	JULY2012
CHECKED BY:	APPROVED:	SCALE:
XX	XX	NTS

JOB NUMBER: 2500

DRAWING NUMBER: 2500-PID-0-110

REVISION: 0

AMENDMENT	DATE	REVISION	AMENDMENT	DATE
PRE-ENGINEERING COMPLETE	14/17/12			14/17/12

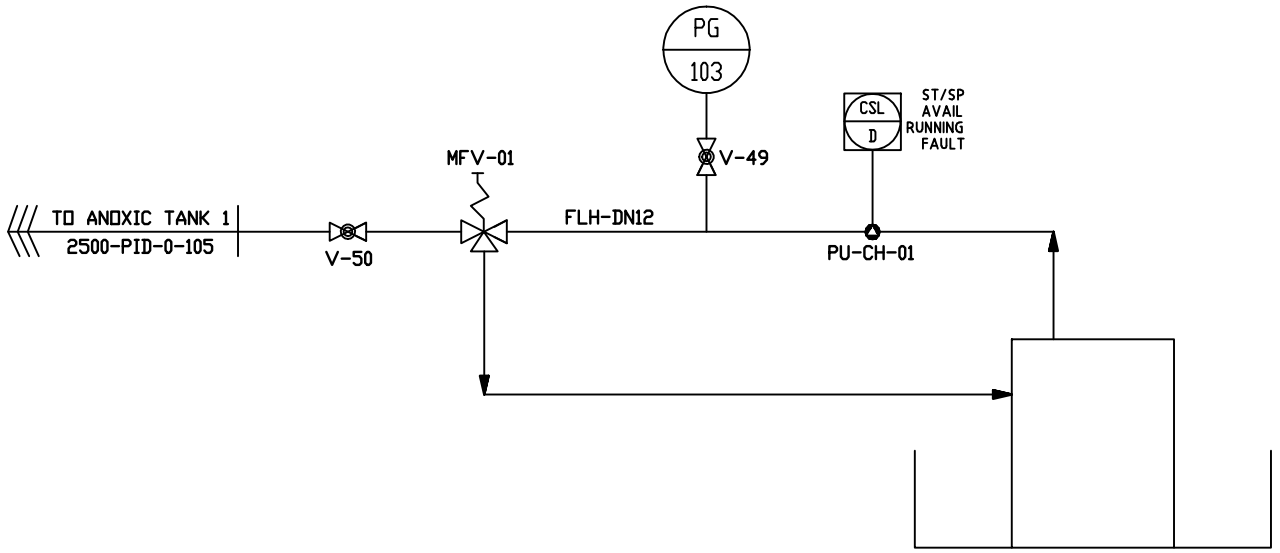

REF #: TP312
NAME: CAUSTIC TANK
SIZE/TYPE: 1kL POLY

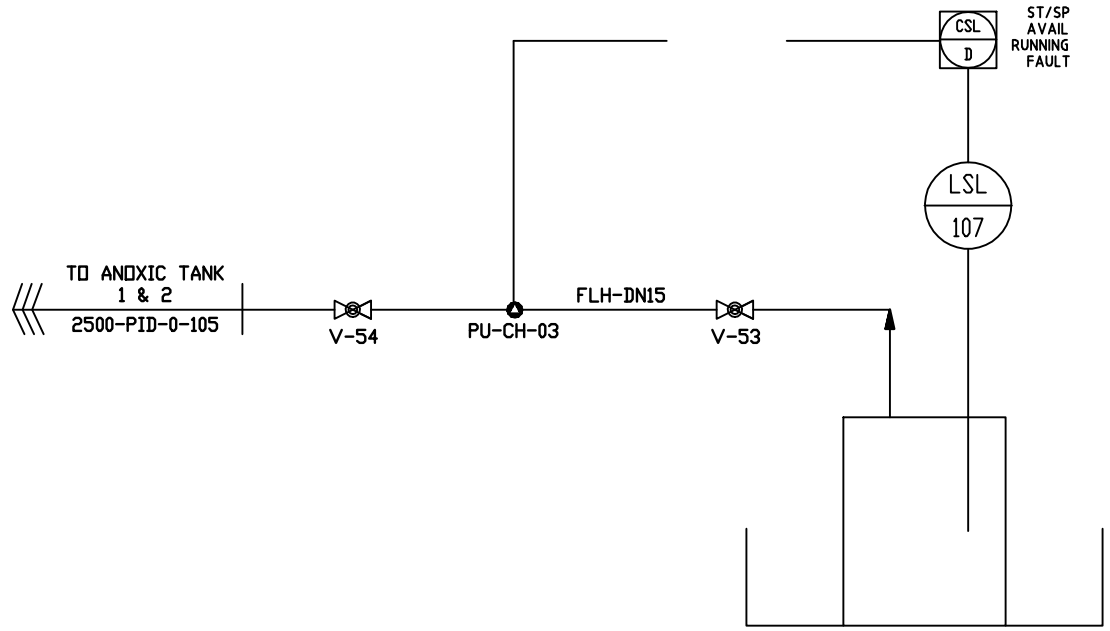

REF #: TP314
NAME: MOLASSES TANK
SIZE/TYPE: 1kL POLY

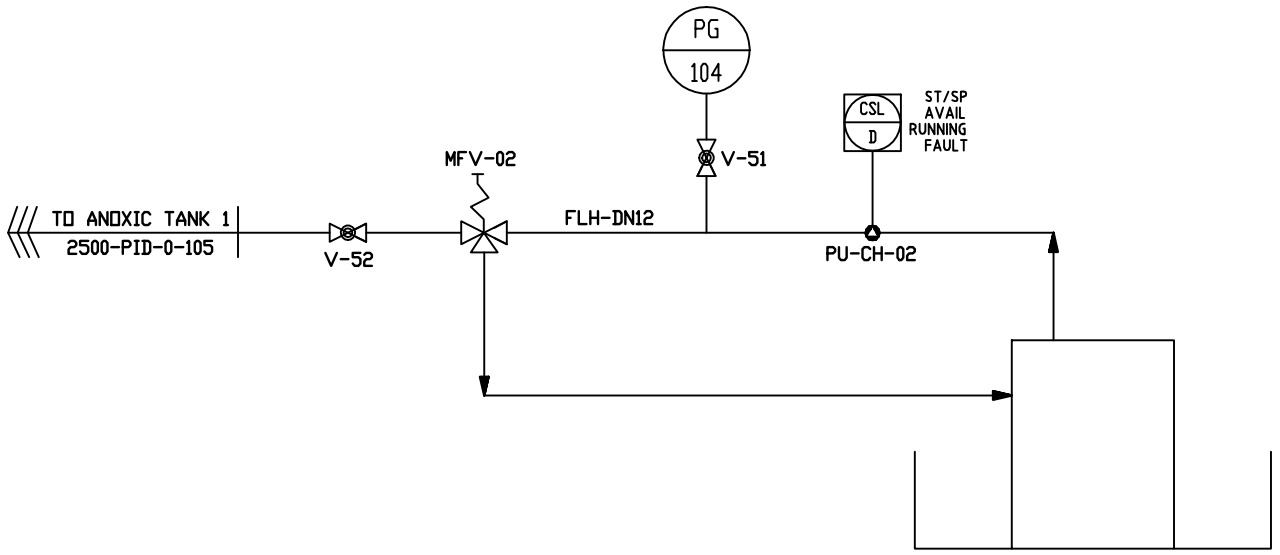

REF #: TP313
NAME: ALUM TANK
SIZE/TYPE: 1kL POLY

PU-CH-01
DUTY PUMP
CAUSTIC PUMP
MAKE: PROMINENT
MODEL: GALa 1005
CAPACITY: 0 - 0.44 LPH

PU-CH-02
DUTY PUMP
ALUM PUMP
MAKE: PROMINENT
MODEL: GALa 1005
CAPACITY: 0 - 0.44 LPH

PU-CH-03
DUTY PUMP
MOLASSES PUMP
MAKE: BREDEL
MODEL: SPX10
CAPACITY: 0 - 0.55 LPH
COMPLETE W/ VFD

STANDARD INDUSTRIES PTY LTD
1 MAIN ROAD
TOUKLEY NSW 2263
PH: 02 4386 7750
FAX: 02 4386 7767
www.standardindustries.com.au

CLIENT NAME: M. TARIQ

PROJECT: MANGROVE MOUNTAIN AGRICULTURAL SCHOOL

This drawing and design remains the property of Standard Industries Pty Ltd. and may not be copied in whole or in part without the prior written approval of Standard Industries Pty. Ltd.

PROJECT NAME: 13,275kL/DAY SEWERAGE TREATMENT PLANT
CLASS B EFFLUENT VIA AERATION, ANOXIC AND SETTLING

DRAWING TITLE: CHEMICAL DOSING PID

DRAWN BY:	DESIGNED:	DATE:
JB	JB	JULY2012
CHECKED BY:	APPROVED:	SCALE:
XX	XX	NTS

JOB NUMBER: 2500
DRAWING NUMBER: 2500-PID-0-111
REVISION: 0

REVISION		DATE	REVISION		DATE
14/11/12	PRE-ENGINEERING COMPLETE	14/11/12			